Observations on the behaviour underground of Philanthus triangulum (Fabricius) (Hymenoptera, Sphecidae)

by

R. T. SIMON THOMAS and R. L. VEENENDAAL
Pharmacological Laboratory, University of Amsterdam

ABSTRACT. — Observations are reported on the behaviour of *Philanthus triangulum* (Fabricius) in the laboratory, digging its burrow and breeding cells, and provisioning the cells with honeybees. Comparisons with field data are given.

INTRODUCTION

The form of the burrows of the bee wolf, *Philanthus triangulum* (Fabricius), as well as the contents of the breeding cells have been studied by several investigators (Beekhuis van Till, 1935; Simon Thomas & Simon Thomas, 1972; Tinbergen, 1933; Vergne, 1935).

However, only an incomplete picture could be formed because all these data were obtained by excavation of the burrows. A method developed in our laboratory now enables us to obtain more information about the construction of the burrow and the behaviour underground of this digger wasp (Simon Thomas & Veenendaal, 1974).

MATERIAL AND METHODS

Females of *Philanthus triangulum* were collected at Tienray (Limburg, the Netherlands) in 1973 during the month of July. The insects were captured near their burrows.

The underground behaviour of *P. triangulum* was observed in an observation cage (Michener

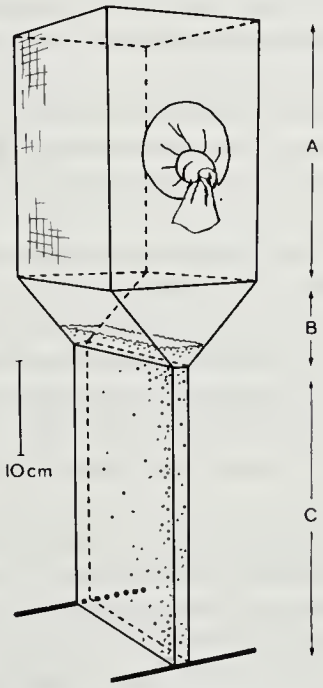

Fig. 1. Observation cage. Two of the walls of the upper part (A) and its top are provided with brass wire gauze; two sides are of perpex (one with a cylindrical tricot sleeve). The lower part (C) consists of parallel glass sheets about 1 cm apart. This part is filled with sand. The upper and the lower part are connected by sloping glass sheets (B).

& Brothers, 1971; Simon Thomas & Veenendaal, 1974). This cage consists of three parts, viz an upper part (fig. 1, A) for flying and a lower part (fig. 1, C) for digging formed by two glass plates, leaving a space of one cm, which is filled with sand. Both parts are connected by sloping glassplates (fig. 1, B).

OBSERVATIONS

The sequence in the behaviour of *P. triangulum* is (a) the digging of the burrow, (b) the catching of bees and the transport into the burrow, and (c) the construction of a breeding cell in which the paralysed bees are deposited. Actions b and c are repeated again and again.

Digging the burrow

Tinbergen (1932) found that the females dig shallow burrows merely for sleeping during the first days after hatching. This author, who worked in the "Hulshorster Zand" (central part of the Netherlands), stated that this initial period could cover a week. In the south of France the period was much shorter, sometimes not longer than a few hours (Simon Thomas & Simon Thomas, 1972), a difference probably due to the higher temperature.

For the observation of the behaviour of *P. triangulum* in captivity we used females just hatched in the laboratory, as well as wasps collected in the field near their nests. Field collected females placed in an observation cage start at once with digging a breeding hole.

P. triangulum requires a firm and dry sandy soil. When the soil in the observation cage was too moist the wasps often stopped their work on the main burrow and began to dig side passages at a higher level. If this happened repeatedly the burrow finally emerged above the ground and the digging came to an end.

Normally, however, the main burrow descends in the observation cage at an angle of 25° with respect to the horizon.

Catching the prey

After the main burrow is ready the female of *P. triangulum* goes hunting for honeybees (*Apis mellifera* Linnaeus) intended as food for the offspring. On leaving the burrow it usually closes the entrance with a sand plug. Tinbergen (1932) states this as a fixed rule. Also at Tienray this was found to be the usual behaviour (Simon Thomas & Simon Thomas-Heijmans, 1973). On the other hand, investigations in southern France (Simon Thomas & Simon Thomas, 1972) revealed that the females mostly left the burrows exposed.

In the field the wasps fly about and look for bees feeding on flowers. On spying a bee, the wasp swoops down on it and stings it in a flash. In the cage, however, the wasps usually attack their prey while walking. When a bee is stung the paralysis sets in at once and is permanent (Rathmayer, 1962).

In the field the wasp flies home with its paralysed prey, which is carried upside down and clutched by the wasp's middle pair of legs. When the wasp arrives in front of its burrow, it removes the sand that covers the entrance, still holding the bee. When the entrance is opened the grip on the prey is taken over by the wasp's hindlegs and the bee is dragged inside. The wasp usually deposits its prey halfway the main burrow (fig. 2) and subsequently starts hunting for the next bee. *Philanthus politus* Say and *P. gibbosus* (Fabricius) leave their prey in the same way (Evans, 1959), but *P. lepidus* Cresson burries its victims in the main burrow before it sets out again (Evans, 1964).

The number of bees caught in succession may vary notably. In the observation cage as a rule two or three bees were captured and dragged underground shortly after each other. In southern France, on the average, a series consisted of three bees (Simon Thomas & Simon Thomas, 1972) and in Tienray of two specimens (Simon Thomas & Simon Thomas-Heijmans, 1973). In the "Hulshorster Zand" also a limited number of three or four specimens were brought in within short interval (Tinbergen, 1932). Subsequently the burrow was always carefully closed from within by a plug of sand of about five cm and the wasp stayed underground for some hours.

The number of bees captured in one series is independent of the number of bees deposited in a breeding cell, which may vary from one to six.

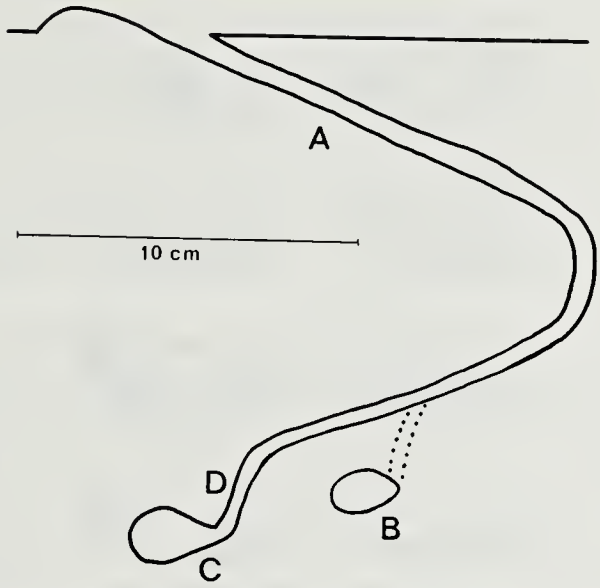

Fig. 2. Breeding hole of *Philanthus triangulum* in the observation cage. A. main burrow; B. first breeding cell; C. second breeding cell; D. connecting passage.

The construction of a breeding cell

Until now the underground activities of the wasp could be investigated only by excavating burrows in various stages of development. Thanks to the observation cage the activities can now be followed more closely.

When once the entrance is closed the female starts digging at the other end in order to enlarge the burrow. The sand is shifted upwards approximately to the place where the paralysed bees were deposited. They are dragged through the accumulated sand which then is transported further upwards until just inside the entrance. After this the wasp goes down again and continues extending the burrow. From time to time superfluous sand is moved upwards in the same way and every now and again the bees are dragged through it. Whenever the bees are shifted, the wasp gnaws them with its jaws. Occasionally the honeystomach is also squeezed empty and the wasp licks the honey from the mandibles of the bee. Similar digging and shifting of sand occurs in *Crabro peltarius* (Schreber) (Simon Thomas & Veenendaal, 1974). As the wasp pauses repeatedly, the digging of the extension may take up about four hours. The last five centimetres of the burrow descend nearly vertically (fig. 2). A horizontal breeding cell is dug out at the end of the burrow. This vertical shaft is comparable with a short slightly downward-sloping connection between the main burrow and the breeding cell always at right angels to the main burrow, found in the excavated burrows in the field. Between the glassplates of the observation cage this is not possible. The digging of a breeding cell starts in a slightly upward direction and is enlarged downwards with the result that the bottom is horizontal. This method is followed in the observation cage as well as in the field. The latter is known thanks to the work of Beekhuis van Till (1935) who excavated hundreds of burrows.

When the breeding cell has reached a sufficient size the wasp presses down the bottom with its abdomen. No notice is taken of the ceiling, this in contrast with *Crabro peltarius* which also carefully flattens it with its pygidium (Simon Thomas & Veenendaal, 1974).

The bees are dragged to the entrance of the breeding cell. Their honey stomach is squeezed once more, the wasp bites them and licks honey. Next the bees are put in the breeding cell, a lengthy procedure. Once they are fitted in, the wasp lugs them out again. One bee is deposited in the entrance of the cell and the others are left nearby in the burrow. The wasp enters the breeding cell and walks to the back of it. Standing before the end of the cell the female makes a rocking motion with its head for ten to fifteen seconds. It may be imagined that in this way the size of the cell is "measured". Later on the wasp larva will need space above the remains of the bees to spin a free hanging cocoon (fig. 3, H). Something similar was observed with *Anoplius*

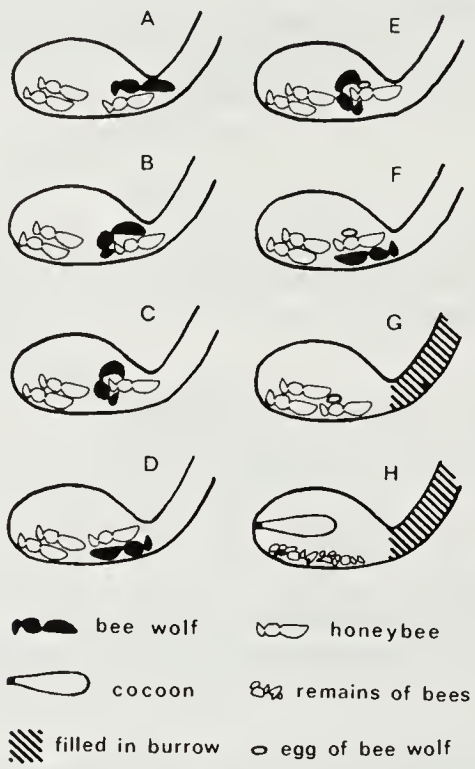

Fig. 3. Generalized outline of the behaviour of *Philanthus triangulum* in the breeding cell. A. wasp bites a honey bee; B, C. wasp crawls over the head of the bee; D. the wasp crawls from below the bee; E. the wasp deposits an egg on the thorax of the bee; F. the wasp crawls from below the bee; G. the breeding cell is closed; H. the cocoon of the wasp is fixed above the remains of the bees.

viaticus (Linnaeus). This pompilid also spins a free hanging cocoon above the remains of a spider. If in this species the breeding cell is too spacious the larva has difficulties in spinning the cocoon which remains unfinished or may even consist of no more than a few threads. A defective cocoon results in a dead pupa.

After this "measuring", the wasp places the bees once more into the breeding ceel and walks up the main burrow as far as the sandplug that closes the entrance. The entire proceeding, consisting of the dragging of the bees from the cell, the "measuring", and the replacement of the bees, is usually repeated and interrupted by periods of inactivity during which the wasp sits quietly in the main burrow for half an hour to several hours.

When finally the bees are placed in their ultimate position, the wasp pulls the one nearest to the entrance foreward, tries once more to squeeze honey from it and bites in its thorax (fig. 3, A). Then the wasp moves forward over the body of the bee and crawls over its head (fig. 3, B, C). In position C the female wasp gropes with its sixth sternite for the desired spot on the ventral side of the thorax of the bee to deposit an egg. The first attempt is never successful. Next the wasp crawls below the bee (fig. 3, D), the wasp as well as the bee now are with their ventral sides upwards. With some difficulty the female wasp scrambles from below the bee and walks the length of the main burrow. Soon the attempt is repeated. After all this preliminary work the actual depositing of the egg is a matter of seconds (fig. 3, E). This time the wasp crawls very carefully from below the bee (fig. 3, F), pushes the bee slightly further into the breeding cell and closes the cell by filling the short connecting passage with sand (fig. 3, G). This final closing procedure lasts merely some minutes.

As has been stated, in the observation cage the egg is deposited on the bee nearest the entrance of the breeding cell. Evans (1959) mentions the same from excavations of *Philanthus lilunatus* Cresson as well as of *P. gibbosus*.

Unlike some other wasp species, e.g. *Bembix* spp. and *Ammophila* spp., *P. triangulum* takes no further care of its young. The bees stored in a breeding cell are sufficient for the development of one larva. Generally speaking one or two bees are put into a breeding cell with an unfertilized egg which will develop into a male wasp. A fertilized egg which will produce a female wasp is provided with three to five bees. After the final closing the female emerges from its burrow to hunt again. When enough bees are collected in the main burrow, the above mentioned procedure starts afresh, viz enlarging of the main burrow, digging of a short connecting passage and breeding cell, depositing of the paralysed bees, laying of the egg and closing of both cell and passage.

After approximately two days the egg hatches and the larva starts to consume the paralysed bee on which the egg has been deposited, the order of sequence being first the neck, then the contents of the thorax and finally that of the abdomen. Only the chitine remains are left. In the same way the other bees are consumed. As all the bees in a breeding cell are eaten, independently of their number, larvae of the bee wolf and consequently also the imagines, vary considerably in size. This in contrast with for instance *Crabro peltarius*. Here sometimes not consumed flies can be found beside a complete cocoon if an abundance of prey animals has been provided. Apparently a *Crabro*-larva stops eating when it has reached a certain size. Consequently the adults of this wasp hardly differ in size.

During the observations in southern France three of these procedures a day were repeatedly noted. As a rule the bees were collected early in the morning, around noon and at the end of the afternoon. After each period of bee hunting the entrance of the burrow was closed and the female wasp stayed underground for a considerable time. It may be concluded that in southern France *P. triangulum* makes three breeding cells a day provided the weather is favorable. At the end of a fine day the female usually cleans the burrow from superfluous sand. During this proces reamaining bees are dragged out as mere rubbish (Simon Thomas & Simon Thomas, 1972). This cleaning also occurred in the cages.

Data obtained from excavations in the field

In southern France several burrows were excavated which were previously filled with a latex solution in water (Simon Thomas & Simon Thomas, 1972). The rubber tube thus prepared can be easily dug out.

In the field the angle of the burrow depends on the slope of the ground (Olberg, 1953). A burrow in a perpendicular wall will run horizontally. In steeply sloping ground a burrow runs horizontal just behind its entrance, declines steeply to gain sufficient depth and proceeds in horizontal direction. In level ground the first part of the burrow goes down gradually at about 25°, then slopes steeply and finally runs more or less level (Simon Thomas & Simon Thomas, 1972). It may be presumed that in all these cases a tendency exists to reach a sufficient depth to guarantee a constant temperature and humidity to the breeding cells that will be constructed later on at the end of the burrow.

Up to fourteen breeding cells have been noted, situated on either side of the horizontal part of the main burrow, the latest cell always at the farthest end of the burrow. In the „Hulshorster Zand" never more than four or five breeding cells were found in one burrow (Tinbergen, 1932). In this stage the female wasp often left the nest to start a new burrow that was usually situated nearby. Also *P. polites* and *P. lepidus* dig more than one main burrow (Evans, 1959, 1964). On the other hand in southern France *P. triangulum* used the same breeding hole during all four weeks of its life unless the owner was chased away by an other female (Simon Thomas & Simon Thomas, 1972, for instance females RG and R). Also *Philanthus solivagus* Say always stays in the same burrow (Evans, 1959).

It must be remembered, however, that one of our excavated burrows made a sudden sharp turn without any apparent reason. The sand in this corner slightly suggested a plugged main burrow. So the possibility remains that, though the entrance was the same, new burrows were dug underground. It has to be kept in mind that an excavation only gives one instantaneous observation. Neither can more information be gained from an observation cage, as because of the very limited space *P. triangulum* stops digging after a week.

ACKNOWLEDGEMENT

Sincere thanks are due to Prof. Dr. C. van der Meer for his valuable help while preparing the manuscript.

REFERENCES

Beekhuis van Till, F. W., 1953. Enige beknopte aantekeningen over het leven van de bijenwolf (Philanthus triangulum F.). — *Maandschr. Bijenteelt* 38: 258-269.

Bouvier, E. -L., 1916. Quelques observations sur les Philanthes, Contribution à l'histoire de l'instinct des insectes. — *Annals Inst. Pasteur, Paris* 30: 205-208.

Evans, H. E., 1959. Biological observations on digger wasps of the genus Philanthus (Hymenoptera: Sphecidae). — *Wasmann J. Biol.* 17: 115-132.

————, 1964. Notes on the nesting behavior of Philanthus lepidus Cresson (Hymenoptera. Sphecidae). — *Psyche* 71: 142-149.

————, 1973. Burrow sharing and nest transfer in the digger wasp Philanthus gibbosus (Fabricius). — *Anim. Behav.* 21: 302-308.

Michener, C. D. & D. J. Brothers, 1971. A simplified observation nest for burrowing bees. — *J. Kans. ent. Soc.* 44: 236-239.

Olberg, G., 1953. Der Bienenfeind Philanthus (Bienenwolf). — *Neue Brehm-Büch.* 94: 1-88.

Rathmayer, W., 1962. Das Paralysierungsproblem beim Bienenwolf Philanthus triangulum F. (Hym., Sphec.). — *Z. vergl. Physiol.* 45: 413-462.

Simon Thomas. R. T. & A. M. J. Simon Thomas, 1972. Some observations on the behaviour of females of Philanthus triangulum (F.) (Hymenoptera, Sphecidae). — *Tijdschr. Ent.* 115: 123-139.

Simon Thomas, R. T. & A. M. J. Simon Thomas-Heijmans, 1973. Het voorkomen en gedrag van de bijenwolf in Nederland. — *Levende Nat.* 76: 64-70.

Simon Thomas, R. T. & R. L. Veenendaal, 1974. Observations on the reproduction behaviour of Crabro peltarius (Schreber) (Hymenoptera, Sphecidae). — *Neth. J. Zool.* 24: 58-66.

Tinbergen, N., 1932. Über die Orientierung des Bienenwolfes (Philanthus triangulum Fabr.). — *Z. vergl. Physiol.* 16: 305-334.

————, 1933. Uit het leven van de bijenwolf (Philanthus triangulum Fabr.). — *Levende Nat.* 38: 1-6.

Vergne, M., 1935. *Contribution à l'éthologie et au développement postembryonnaire de quelques Hyménoptères prédateurs (Sphégiens) en particulier de Philanthus triangulum F.*: 1-141. Imprimerie Moderne, Clermont-Ferrand.

Polderweg 104, 1093 KP Amsterdam, the Netherlands.

KENNETH A. SPENCER, 1976, THE AGROMYZIDAE (DIPTERA) OF FENNOSCANDIA AND DENMARK. — Fauna Entomologica Scandinavica 5 (2 delen, 606 pag., 922 fig.). Scandinavian Science Press Ltd., Chr. holms Parallelvej 2, DK-2930 Klampenborg, Danmark. Prijs D.Kr. 180, bij intekening op de gehele serie D.Kr. 126, bij gedeeltelijke intekening D.Kr. 162.

Een zeer gedegen studie over de mineervliegjes van deze landen met prachtige afbeeldingen, getekend door de echtgenote van de schrijver. In totaal worden 385 soorten behandeld en afgebeeld. Dit is ongeveer de helft van het totaal aantal Europese soorten. Veel van de behandelde soorten zijn ook uit Nederland bekend of zijn hier nog te verwachten. Daarom is dit werk ook voor ons land van belang. Tabellen op genera, subgenera en soorten maken determinatie van de imagines tot op de soort mogelijk. Bij de beschrijving van elke soort worden de synoniemen gegeven, de verspreiding in Europa, de voedselplanten en dikwijls ook afbeeldingen van de gevormde mijnen of gallen. Ook wordt aandacht besteed aan de habitus van larven en puparien. Enkele korte hoofdstukken zijn gewijd aan de zoögeografie, de levenswijze, het economisch belang en het kweken van deze insekten. Apart wordt er door de schrijver op gewezen ze vooral droog te bewaren en niet in alcohol, aangezien de determinatie bij deze laatste manier van bewaren sterk bemoeilijkt wordt. Alles bijeen een uitstekende studie, die ook voor ons zeer aan te bevelen is. — Theowald van Leeuwen.